Aspheric Condenser Lens

Introductions

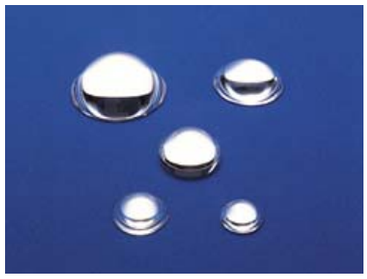

Aspheric lenses provide better performance by reducing aberrations and are ideal for use in low f-number, high-throughput applications. These lenses have one aspheric surface. Available with three distinct second surfaces: plano, spherical convex and spherical concave.

Beam Path

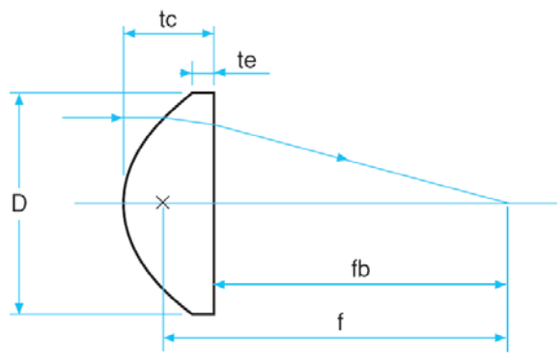

Standard Specifications

Items	Specifications
Material	B270
Designed Wavelength	546.1 nm
Designed Index	1.523 ±0.0005
Dimension Tolerance	+0.0/-0.2 mm
Thickness Tolerance	± 0.2 mm
Paraxial Focal Length	± 2%
Clear Aperture	> 90%
Centration	3 arc minutes
Flatness	λ/4 at 632.8 nm
Surface Quality	scratch and dig 60-40
Bevel	0.5 (0/-0.3) mm

Notes:

1. Material, besides B270, BK7, fused silica and any other materials are available.
2. Surface Quality could reach 40-20 or 20-10
3. Centration such as 1', 30" is available.
4. Please show us the size and the coating specification.

Part NO.	ф (mm)	f(mm)	f_b(mm)	t_c(mm)	t_e(mm)	Rear Surface
LAS0101	12.0	8.50	5.8	5.5	1.6	Convex
LAS0102	12.0	10.50	8.2	3.5	1.1	Plano
LAS0103	18.0	12.0	6.9	8.8	3.3	Convex
LAS0104	19.0	17.0	12.4	7.0	1.8	Plano
LAS0105	25.0	20.0	15.1	7.5	1.2	Plano